6.2A-18001-A96

Mobile Lubricators
Model AM 08/14/24

1077a95

Subject to change without notice

SKF Lubrication Systems Germany GmbH ● Heinrich Hertz-Str. 2-8 D-69190 Walldorf Tel. +49(0) 6227 33-0 ● Fax: +49 (0) 6227 33-259

Preface

This Owner manual is intended to familiarize the user with the pump/lubrication system and to enable him/her to use its various features.
The Operating Instructions contain important information for safe, correct and economic operation of the pump/lubrication system. Their observance will help avoid hazards, reduce repair costs and downtime, increase the reliability and prolong the service life of the pump/lubrication system.
These Operating Instructions must be completed to include the respective national regulations concerning the prevention of accidents and protection of the environment.
The Owner manual must always be available on the site where the pump/lubrication system is in operation.

If persons who are charged with work with the pump/lubrication system do not have a good command of the english language, it is the user's responsibility to take the necessary action to make the Owner manual, particularly the Operating Instructions, understandable to these persons.
The Owner manual must be read and used by all persons who are charged with work with the pump/lubrication system, e.g.

- **Operation**, including adjustment, troubleshooting during operation, elimination of production waste, maintenance, disposal of process materials
- **Maintenance** (inspection, repairs)
- **Transport**

Table of Contents

SKF Lubrication Systems Germany GmbH ● Heinrich Hertz-Str. 2-8 D-69190 Walldorf Tel. +49(0) 6227 33-0 ● Fax: +49 (0) 6227 33-259

1 Safety Notes

The Operating Instructions include general instructions which must be followed when a pump/lubrication unit is installed, operated or serviced. Therefore, it is absolutely necessary for the fitter and the specialist/user to read the Operating Instructions before a unit is installed and commissioned. The Operating Instructions must always be available on the site where the machine/system is erected.
All general safety instructions contained in this main chapter on safety must be observed as well as all special safety instructions given in other main chapters.

Hazard warnings in the Operating Instructions
The notes referring to safety contained in the Operating Instructions whose failure to observe may result in personal injury are marked by the following symbol

Safety symbol acc. to DIN 4844-W9

10013a94

The symbol

Safety symbol acc. to DIN 4844-W8

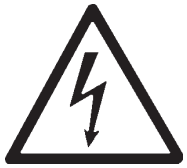

10014a94

warns of an electrical hazard.

If ignoring the safety note might result in machine damages and malfunction, the word

CAUTION

is added.

Warnings directly fixed to the machine must always be observed and must be kept in completely legible condition.

Staff Qualification and Training
The staff responsible for operation, maintenance, inspection and installation must be adequately qualified for these jobs. The user must properly regulate the field of responsibility and supervision of the personnel. If the personnel is not in command of the necessary expertise, they must receive appropriate training and instructions.
If necessary, this can be done by the manufacturer/supplier on behalf of the machine user. Furthermore, the user must ensure that the contents of the Operating Instructions are fully understood by the personnel.

Hazards resulting from failure to observe the safety instructions
Failure to heed the safety warnings may result in damage to equipment and the environment and/or personal injury.
Failure to observe the safety notes may result in the loss of all claims for damage.
As an example, in the following we list some dangers which may result from failure to observe the warnings:
- failure of machine/system to fulfill important functions
- failure of specified methods for maintenance and repair
- personal injury due to electrical, mechanical and chemical influences
- danger to the environment due to leakage of harmful materials

Safety-Conscious Working
The safety instructions given in the Operating Instructions, the prevailing national regulations for the prevention of accidents and any internal working and shop regulations and accident prevention measures of the user must be observed.

Safety Instructions for the User/Operator
- If warm or cold machine parts may involve hazards, the customer must protect them against accidental contact.
- Do not remove protection devices for moving parts while the machine is in operation
- Leakages of harmful materials must be disposed of so as not to jeopardize neither persons nor the environment. The requirements of the law must be satisfied.
- Danger caused by electrical current must be excluded (for details refer to the applicable specifications of VDE and the local power supply companies).

SKF Lubrication Systems Germany GmbH ● Heinrich Hertz-Str. 2-8 D-69190 Walldorf Tel. +49(0) 6227 33-0 ● Fax: +49 (0) 6227 33-259

Safety Instructions for Maintenance, Inspection and Installation Services

The user must make sure that all maintenance, inspection and installation work is executed by authorized and qualified experts who have throroughly read the Operating Instructions.

On no account may work be done on the machine while the machine is in operation. Follow all instructions for shutting down the machine as described in the Operating Instructions. Decontaminate pumps and pump units delivering harmful materials.

Reassemble all safety and protection devices immediately after completion of the cleaning procedure.

Dispose of material harmful to the environment in accordance with the applicable official regulations.

Before putting the pump/lubrication unit into operation, ensure that all points given in the chapter „Commissioning“ are observed.

Unauthorized Modification and Spare Parts Production

Alteration and modifications of the machine are only allowed if approved by the manufacturer. Original spare parts and accessories authorized by the manufacturer ensure safe operation. If other parts are used, the manufacturer may be released from its liability for the resulting consequences.

Inadmissible Operating Modes

The operational safety of the supplied product is only granted if the product is operated according to the instructions given in chapter 2.2 of the Owner manual. The max. ratings listed in the Technical Data sheet must never be exceeded.

SKF Lubrication Systems Germany GmbH ● Heinrich Hertz-Str. 2-8 D-69190 Walldorf Tel. +49(0) 6227 33-0 ● Fax: +49 (0) 6227 33-259

2 Description

2.1 General

This Owner manual only refers to the mobile lubricator in charge of the series AM 08/14/24. It is intended for the personnel the assembly, service and maintenance of the units.
If you require more details, please contact us at the following address:

SKF Lubrication Systems Germany GmbH
Abt. Zentraler Kundendienst
Postfach 1263
D-69183 Walldorf
Tel +49 (6227) 33-0
Fax +49 (6227) 33-259

2.2 Appropriate Use

The mobile lubricators model AM 08/14/24 are exclusively used for dispensing grease to individual lubrication points and for filling lubrication pumps.
The maximum ratings mentioned in the Technical Data, particularly the max. operating pressure of 400 bar, must never be exceeded.
Any other utilisation is not in accordance with the prescribed use and will result in the loss of all claims for guarantee and damage.

2.3 Technical Data

Model	AM08	AM14	AM24
Lubricant Output	8 dm³/h	14 dm³/h	24 dm³/h
Drive speed	60 rpm 1500 rpm mit Reduziergetriebe	100 rpm	180 rpm
Operating pressure		p max= 400 bar	
Connection thread		pressure line relief line filling line	3/4" BSPm. 3/4 „BSPm. 3/4 „BSPm.
Direction of rotation of the drive		as desired	
Reservoir capacity		40 dm³	
Lubricant filter		filter area 5.1 cm² grade of filtration 280 µm	
Suitable lubricants		grease up to NLGI grade 3	
Safety valve		fixed setting: 410 bar, tamper-proof	
Drive motor		refer to Motor Data Sheet	
Sound level		< 70 dB (A)	

Note: In the case of 60 Hz motors the speed and thus the lubricant output may be less then the theoretical value calculated. With stiff greases and at low temperatures the effective output may be less then the theoretical value calculated.

2.4 Layout

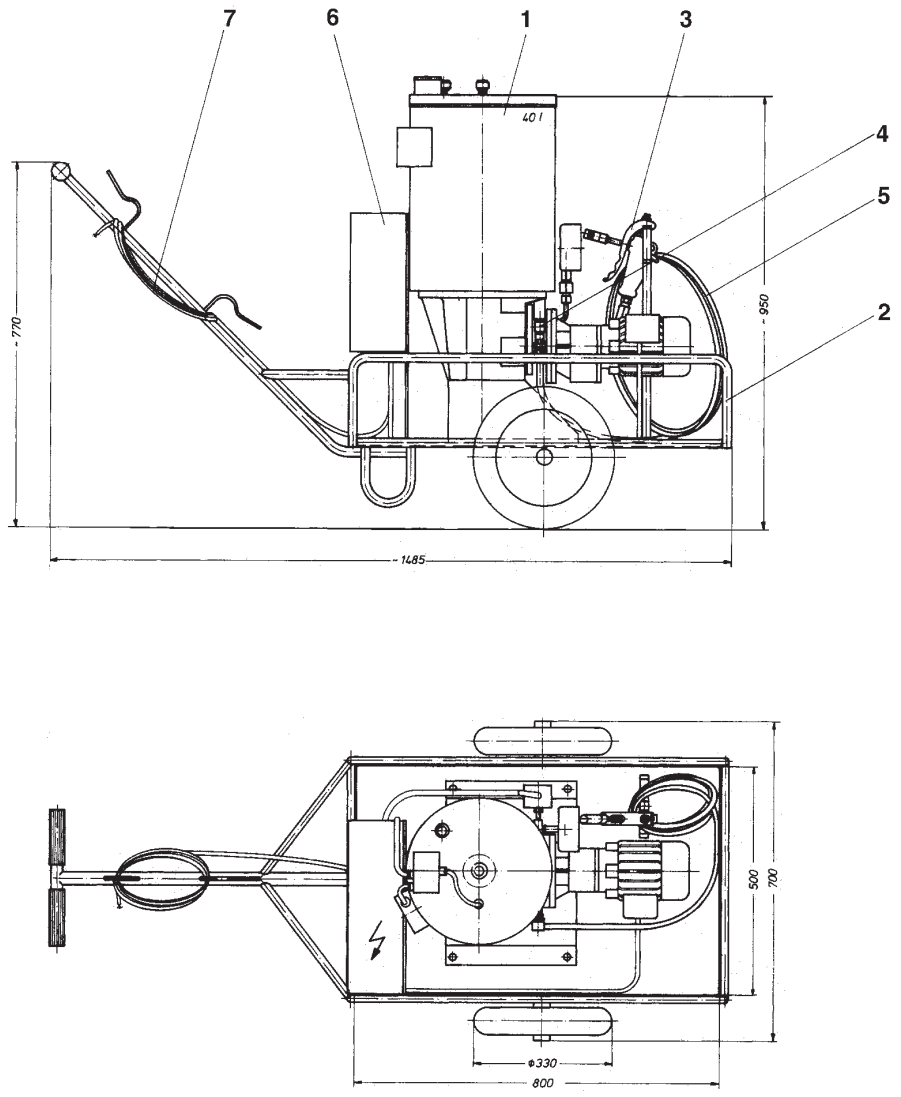

Fig. 2.4.1: Layout of the mobile lubricator

Item	Description
1	lubrication pump ZPU08, ZPU14 or ZPU24
2	trolley
3	*control valve ”E”
4	*2-way swivel 90°
5	*high pressure hose
6	electrical control box
7	power supply cable

* not included in our standard delivery program

SKF Lubrication Systems Germany GmbH ● Heinrich Hertz-Str. 2-8 D-69190 Walldorf Tel. +49(0) 6227 33-0 ● Fax: +49 (0) 6227 33-259

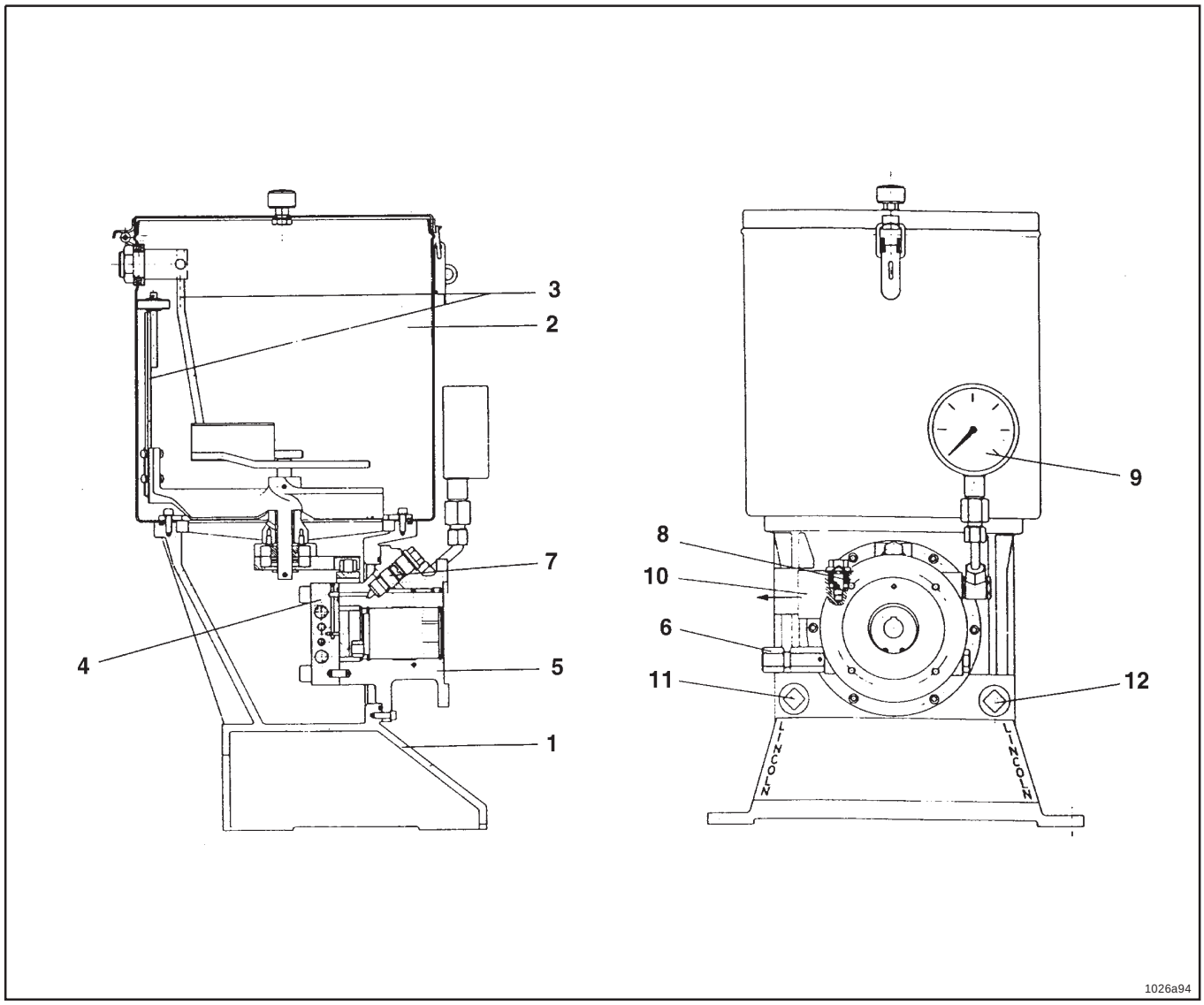

Fig. 2.4.2: Structure of the central lubrication pump

The pumps ZPU 08/14/24 consist of the following parts:

Item	Description
1	pump housing
2	lubricant reservoir
3	stirring paddle with scraper and fixed paddle
4	high-pressure pump element
5	bearing flange with drive
6	safety valve

Item	Description
7	check valve
8	lubricant filter
9	pressure gauge
10	pressure line connection
11	pressure switch
12	filling connection

The detailed pump structure and its equipement are indicated in the following model designation chart.

SKF Lubrication Systems Germany GmbH ● Heinrich Hertz-Str. 2-8 D-69190 Walldorf Tel. +49(0) 6227 33-0 ● Fax: +49 (0) 6227 33-259

Description

Model designation chart
The full model designation is mentioned on the nameplate.

Model Designation

AM08	**40**	**XN**	**380-415/ 420-480V**
AM14	**40**	**XN**	**380-415/ 420-480V**
AM24	**40**	**XL**	**500**

Lubricant delivery:
08 = 8 dm³/h
14 = 14 dm³/h
24 = 24 dm³/h

Reservoir capacity:
40 = 40 dm³

Reservoir design:
XN = standard grease reservoir
XL = with low level control

Motor supply voltage:
380-415/
420-480V =Multi range motor 380-415V 50 Hz and 420-480V 60 Hz
500 = 500 V, 50 Hz
other voltages on request

SKF Lubrication Systems Germany GmbH ● Heinrich Hertz-Str. 2-8 D-69190 Walldorf Tel. +49(0) 6227 33-0 ● Fax: +49 (0) 6227 33-259

Description

The pump is equipped with the following units:

1. **Lubricant filter, item 8, page 7**
   Cleans the lubricant and prevents impurities from entering the pump reservoir

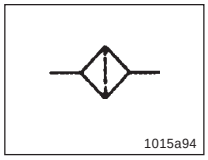

2. **Safety valve, item 6**
   Protects the pump against too high backpressure. The safety valve is set to a pressure of 410 bar and is tamper-proof.

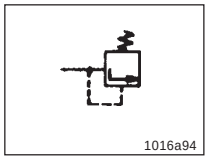

3. **Pressure gauge, item 9**
   Allows visual monitoring of the operating pressure

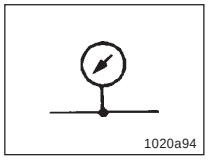

4. **Electro-hydraulic pressure switch, item 11,**
   Switches the pump drive motor off at a preset pressure (160 to 400 bar)

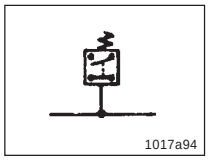

Optional equipment :

5. **Low level control for 40 dm³ reservoirs**
   Via the pivoted paddle and magnetic switch
   Note: Not to be used with greases NLGI grade 3

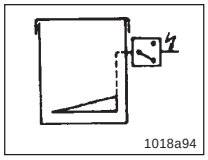

6. **Control valve with connecting tube and universal swivel**
   (refer to data sheet attached to the appendix)

7. **High-pressure hose available in following versions:**

Description	p/no.
hose type ”A”, DN 6, 3000 mm long with connection 1/4” BSP f.	666-36009-1
hose type ”A”, DN 10, 3000 mm long with connection 1/2” BSP f.	666-36005-3
hose type “A”, DN 6, 6000 mm long with connection 1/2” BSP f.	666-36005-6
hose type “A”, DN 6, 10000 mm long with connection 1/2” BSP f.	666-36005-8
reducing bushing 1/2” male x 1/4” female	222-12521-2
hose type “A”, DN 6, 3000 mm long with connection 1/4” BSP f.	666-36003-5

SKF Lubrication Systems Germany GmbH ● Heinrich Hertz-Str. 2-8 D-69190 Walldorf Tel. +49(0) 6227 33-0 ● Fax: +49 (0) 6227 33-259

2.5 Electrical equipment

Control box	Electrical circuit diagram attached to the appendix
Flanged gear motor	Motor data sheet attached to the appendix
Pressure switch	Technical data sheets attached to the appendix

Accessories:

Low level control (via pivoted paddle)	-”-

2.6 Mode of Operation

The lubricant is filled by hand into the reservoir (connection, item 12) via the opened cover or by means of a filling pump.
A stirring paddle with scraper and a fixed paddle (item 3) are installed in the reservoir. The grease is homogenized and purged of air by the rotation of the stirring paddle. The fixed paddle prevents the grease from flowing in the direction of rotation of the stirring paddle. When an electrical low level control is installed, the fixed paddle is pivoted in a needle bearing.
The pump element (item 4) operates as a piston pump with 2 pistons operating in opposite direction which suck in lubricant alternately and then feed it through the outlet hole to the pressure line. The outlet channels of the high-pressure pistons are controlled by a floating valve piston.
The pump element is driven by a hollow shaft with eccentric pin and roller, by which the rotary movement of the driving shaft is converted into the oscillating movement of the pump pistons. With this kind of drive, the direction of rotation of the pump shaft can be selected and changed as desired.
The lubricant supplied by the pump element is fed via a check valve (item 7) and a lubricant filter (item 8) to the pressure line connection (item 10).
A safety valve (item 6) and a pressure gauge (item 9) are also supplied with the pressure line connection.

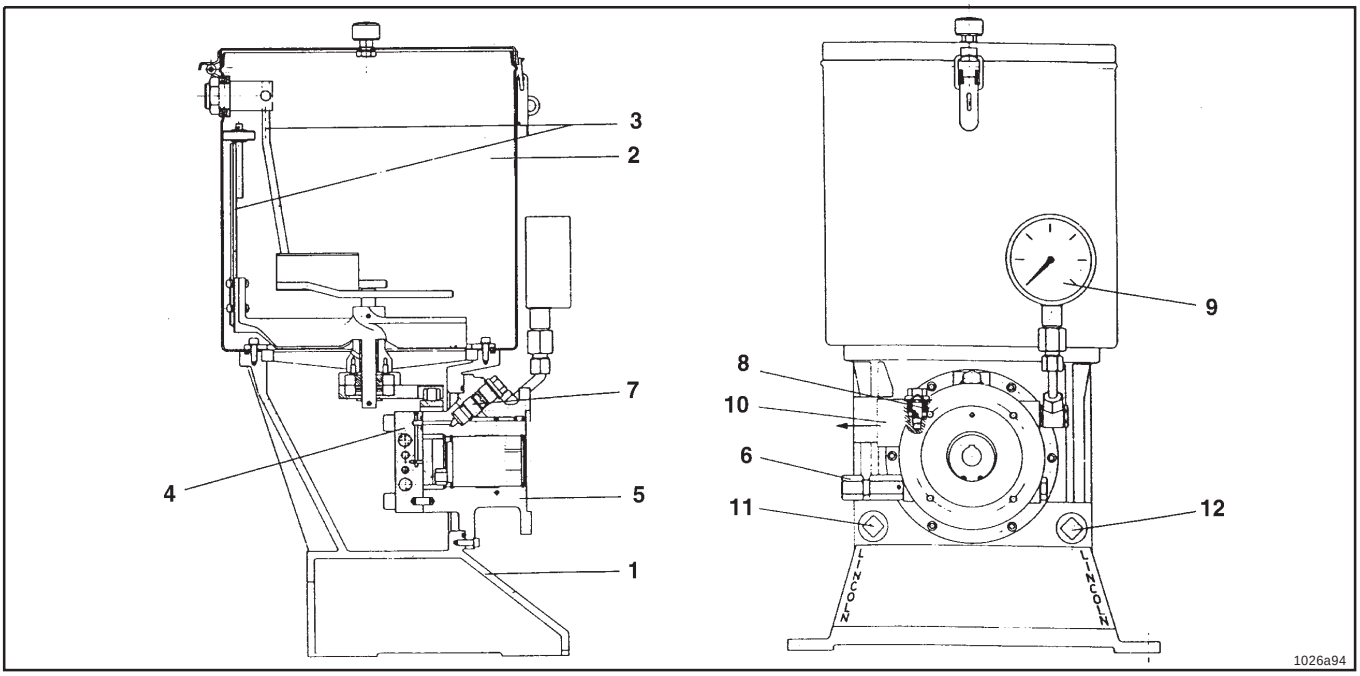

SKF Lubrication Systems Germany GmbH ● Heinrich Hertz-Str. 2-8 D-69190 Walldorf Tel. +49(0) 6227 33-0 ● Fax: +49 (0) 6227 33-259

Description

The pump element operates as a piston pump with two pistons operating in opposite direction which suck in lubricant alternately and feed it through the outlet hole to the pressure line. The outlet channels of the high-pressure pistons are controlled by a floating valve piston
The pump element is driven by a hollow shaft with eccentric pin and roller, by which the rotary movement of the driving shaft is converted into the oscillating movement of the pump pistons

Description of operation of the high-pressure pump element

1, 2 = delivery piston
3 = control piston (floating)
I = suction borehole for delivery piston 1
II = suction borehole for delivery piston 2
III = outlet borehole (pressure connection)

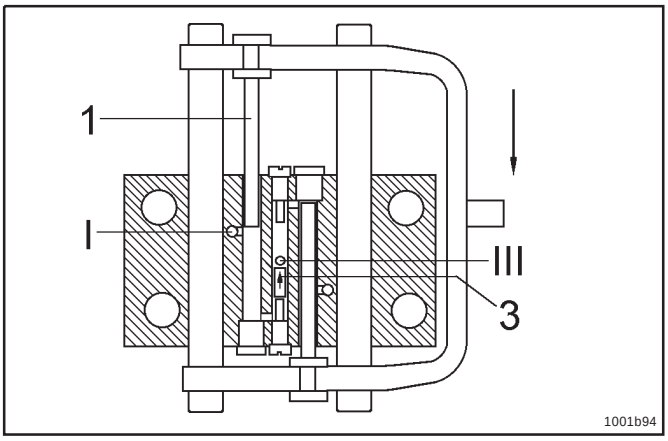

Fig. 2.6.1 Upper final position

The piston begins to move downward

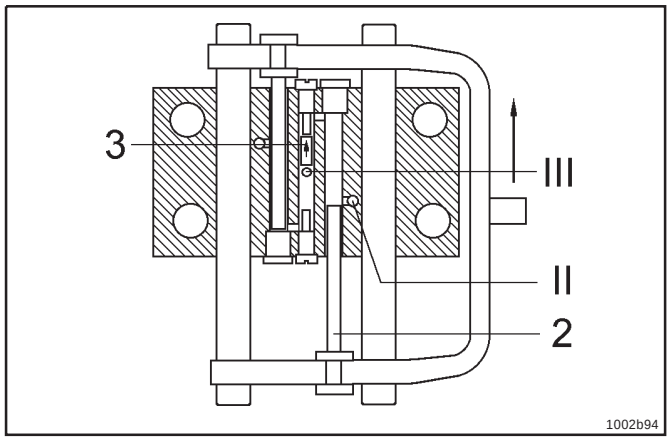

Fig. 2.6.3 Lower final position

The piston begins to move upward

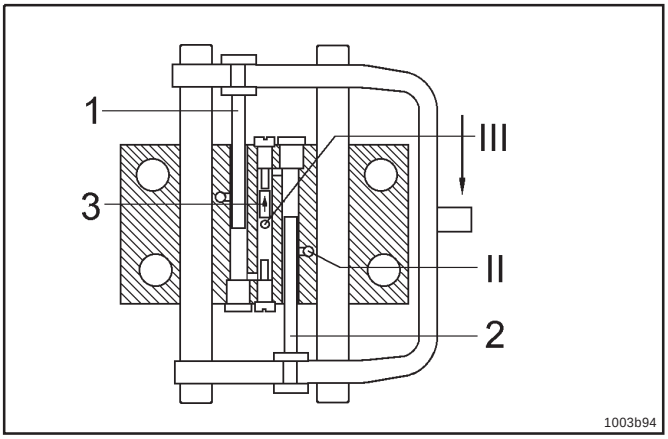

Fig. 2.6.2 discharge stroke upwards

Delivery piston 1 moves floating piston 3 upward, with the lubricant stored ahead of it (from the preceding suction stroke).
The lubricant is dispensed into the pressure line via the outlet borehole which is opened now.
A vacuum is generated by delivery piston 2, with the result that, after borehole II has been opened, lubricant is sucked in.

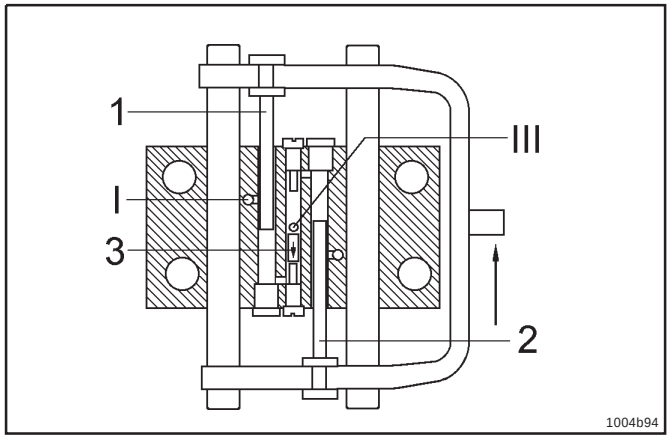

Fig. 2.6.4 discharge stroke downwards

Delivery piston moves the floating piston upward, with the lubricant stored from the preceding suction stroke.
The lubricant is dispensed into the pressure line.
Delivery piston 1 sucks in lubricant.

SKF Lubrication Systems Germany GmbH ● Heinrich Hertz-Str. 2-8 D-69190 Walldorf Tel. +49(0) 6227 33-0 ● Fax: +49 (0) 6227 33-259

3 Erection and Assembly

3.1 Preliminary mechanical work

- Connect high-pressure hose to pressure line connection of pump.
- Connect control valve with universal swivel to the other end of the high-pressure hose.

3.2 Electrical Connection

All electrical work should be executed only by qualified personnel.

The electrical units in the control box are wired and ready for operation.
The electrical connection cable must be equipped with a plug which must be in conformity with the available sockets.
Core identification for the plugs: refer to circuit diagram.

4 Operating Instructions

4.1 Commissioning

Filling of the lubricant reservoir

The grease reservoir must be filled with clean lubricant via the filling connection fitting or via the opened cover.

When filling the reservoir, take care that no foreign particles or dirt enter the reservoir.
Always refill the reservoir in due time.
Avoid dust in the machine area.

CAUTION

Plug main plug into live socket. Take care that the voltage is correct and properly power fused.

Do not bend the cable in an extreme way, or expose it to a mechanical destruction.
Do not expose the cable to high temperatures or chemicals.
Replace it immediately if it is damaged.

Do not touch the parts within the reservoir while the pump is in operation.
Danger due to the stirring paddle.

Switch pump ON and let it run until the grease emerges from the hydraulic coupler of the control valve without air bubbles (actuate control valve).
Switch pump OFF on the control box.
The mobile lubricator is ready for operation.

SKF Lubrication Systems Germany GmbH ● Heinrich Hertz-Str. 2-8 D-69190 Walldorf Tel. +49(0) 6227 33-0 ● Fax: +49 (0) 6227 33-259

4.2 Operation

Move the mobile lubricator on even surfaces only.
Do not stay in the tilting area of the trolley.

CAUTION

- Plug the main plug into the live socket. The signal lamp for the control voltage lights .
- Switch pump ON via the switch on the timer.
- The pump begins to operate and builds up pressure.
- The control valve can now be coupled to a lubrication fitting.
- Actuate the valve until the desired lubricant quantity is reached.
- If the valve is not actuated, the pump is switched off automatically (factory setting: 280 bar).
- Proceed on the same way for the other lubrication points.

Never direct the control valve towards persons or parts of the body!
Never try to deviate or stop the lubricant which is discharged from the coupler with the finger!
Avoid any contact with the coupler!

- In the case of longer interruptions of operation, switch the mobile lubricator off via the switch on the timer. Remove the main plug and reduce the pressure in the high-pressure hose (relieve the compressed grease into the reservoir via the control valve).

4.3 Maintenance and Repair

Repair work should be executed only by qualified personnel using original spare parts.

Before undertaking any repair work on the mobile lubricator, take care of the following:

- **Switch mobile lubricator OFF and remove main plug.**
  Danger of injury by the stirring paddle.
- **Reduce the pump pressure and system pressure to 0 (observe the pressure gauge).**
  For this, relieve the compressed grease into the reservoir via the control valve.

Under the condition that the pump only supplies clean lubricant, it does not need any particular maintenance. The pump element lies in the grease which is fed and is therefore lubricated automatically. It is subject to natural wear which depends on the operating time and adjusted pressure.

Maintenance work:

- Clean the lubricant filter (item 26 - spare parts list) every 100 operating hours. First, remove closure plug item 30. Unscrew filter insert and clean it. If it is very dirty, replace it.

- Replace the check valve (item 21 - spare parts list) if the filter is clogged. First, remove closure plug item 22.

To ensure service life the gears of the flanged motors are filled with oil in the factory.

SKF Lubrication Systems Germany GmbH ● Heinrich Hertz-Str. 2-8 D-69190 Walldorf Tel. +49(0) 6227 33-0 ● Fax: +49 (0) 6227 33-259

4.4 Troubleshooting

• **Fault: pump does not supply the lubricant**	
• **Cause:**	• **Remedy:**
• No electrical voltage applied (signal lamp for control voltage does not light)	• Check voltage supply, main plug, socket and cable.
• Pressure switch is actuated	• Reduce the pressure under cut-in pressure of the pressure switch. If the switch does not respond, check pressure switch and position switch.
• Motor circuit-breaker has opened	• check and eliminate motor overload, actuate motor circuit breaker again
• Reservoir empty	• Refill reservoir with clean lubricant. Then, let pump run until the lubricant emerges from the pressure line connection without air bubbles.
• Filter clogged *Note: this is indicated by short, strong deflections on the pressure gauge of the pump*	• Check filter (item 8) and clean it. If it is damaged, replace it.
• Eccentric shaft or drive parts of the ratchet gear rocking plate and of the stirring paddle damaged or defective	• Replace parts
• Suction boreholes of pump element clogged	• Remove pump element, clean it and check it for foreign particles

• **Fault: pump runs, but there is no pressure**	
• **Cause:**	• **Remedy:**
• Check valve (item 7) clogged or defective	• Replace check valve
• Pump element (item 4) damaged or defective	• Replace pump element Note: the pump element cannot be repaired since its pistons are adjusted in the factory with the highest tolerances.

• **Fault: lubricant is leaking from the pump safety valve**	
• **Cause:**	• **Remedy:**
• Pressure switch defective	• Check pressure switch

SKF Lubrication Systems Germany GmbH ● Heinrich Hertz-Str. 2-8 D-69190 Walldorf Tel. +49(0) 6227 33-0 ● Fax: +49 (0) 6227 33-259

All repair work beyond the knowledge of the user's personnel must be undertaken by Lincoln qualified experts. For this, send the defective pump to the Repair Department of Lincoln or call a specialist who will repair the pump on site.

Address of the Service Department:

SKF Lubrication Systems Germany GmbH
Central Service Dpt.
Postfach 1263
D-69183 Walldorf
Tel +49 (6227) 33-0
Fax +49 (6227) 33-259

4.5 Adjustments

The shut-off pressure at the electro-hydraulic pressure switch is set in the factory to 350 bar.
It can be readjusted to a lower or higher pressure, if necessary. In such a case, take care that the max. admissible pump pressure of 400 bar is not exceeded.
Refer to enclosed leaflet for the description of the pressure switch and its adjustment.

SKF Lubrication Systems Germany GmbH ● Heinrich Hertz-Str. 2-8 D-69190 Walldorf Tel. +49(0) 6227 33-0 ● Fax: +49 (0) 6227 33-259

5 Spare Parts List

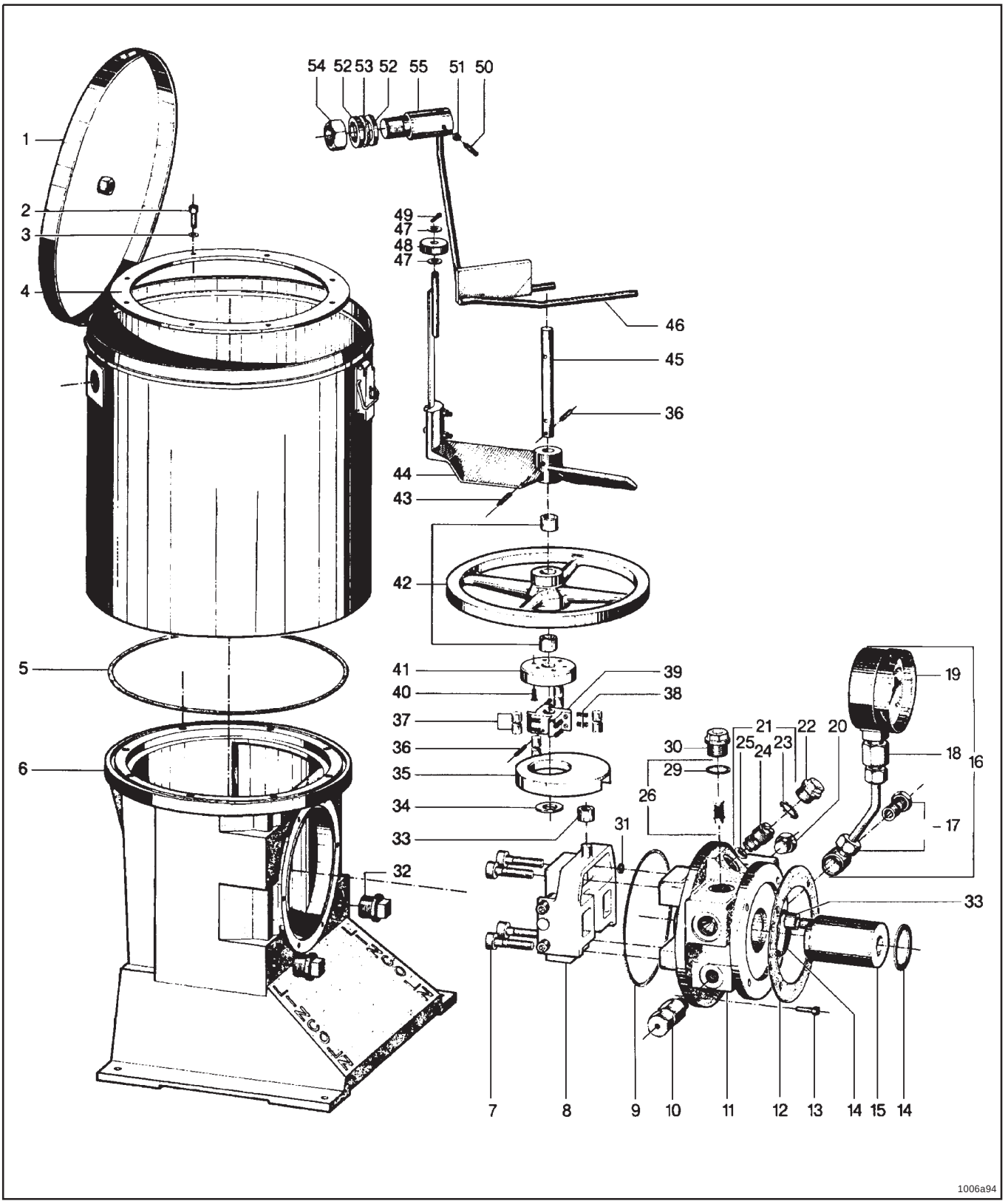

Fig 5.1: Central lubrication pump ZPU 08/14/24 without drive assemblies

SKF Lubrication Systems Germany GmbH ● Heinrich Hertz-Str. 2-8 D-69190 Walldorf Tel. +49(0) 6227 33-0 ● Fax: +49 (0) 6227 33-259

Spare Parts Drawing and Spare Parts List

6.2A-18001-A96

Item	Designation	Qty.	Part Number
	without drive assemblies		
1	reservoir 40 dm³ with air filter	1	505-30851-1
2	Hexagon socket head screw M6x20C	8	201-12018-5
3	Tooth lock washer J6, 4Z	8	210-12161-3
4	Clamping ring	1	405-20315-1
5	O-ring Ø 265x4	1	219-12227-1
6	Housing	1	314-18594-1
7	Hexagon socket head screw M12x45C	4	201-12028-4
8	Pump element with item 31	1	505-30405-3
9	O-ring Ø 155x4	1	219-12226-5
10	Safety valve SV-410-R3/8AZ	1	624-27092-1
11	Bearing flange	1	505-30853-1
12	Sealing ring 110x160x1	1	306-17856-1
13	Hexagon socket head screwM6x20C	6	201-12018-5
14	Retaining ring J55x2	2	211-12165-6
15	Eccentric shaft	1	405-20316-2
16	High pressure gauge assy.	1	505-30852-1
17	SWVE10 -SG3/8AC	1	223-12285-5
18	MAV 10 - SG1/2C	1	223-13028-4
19	High pressure gauge D100 0-600bar	1	234-13101-2
20	Closure plug R318x10Z	2	303-17440-1
21	Check valve with gaskets	1	505-36089-1
22	Closure plug M20x1,5C	1	203-12077-3
23	Sealing ring Cu 20x26x1,5	1	209-12158-4
24	Check valve without gasket	1	524-30812-1
25	O-ring Ø 10 x 3	1	219-13043-8
26	Filter assy. with gasket	1	528-30822-1
29	Sealing ring Cu 22x28x1,5	1	209-12464-8
30	Closure plug M22x1,5x16Z	1	303-19310-1
31	O-ring Ø 9,3x2,4	1	219-13043-7
32	Flanged square head plug R 3/4 Z	2	203-12095-2
33	Roller	2	405-23544-1
34	Washer B15, 0C - 140 HV	1	209-13077-8
35	Ratchet gear rocking plate	1	405-23546-1
36	Roll pin 5x28	2	215-12187-3
37	Roller	8	405-24314-1
38	Compression spring 6,3x1x11	8	300-17203-1
39	Ratchet wheel	1	405-20307-1
40	Flat head screw M5x12C	6	202-12402-2
41	Brake drum	1	405-20304-1
42	Stirrer support assy.	1	505-30410-1
43	Roll pin 5x36	1	215-12187-5
44	Stirring paddle with scraper (40 l reservoirs) with items 47, 48 and 49	1	505-30409-1
45	Stirrer shaft	1	405-20306-1
46	Fixed paddle (40 l reservoir)	1	405-20309-1
47	Washer A8, 4C	2	209-13077-1
48	Knurled roller	1	406-20344-2
49	Cotter pin 3x16Z	1	215-12180-2
50	Set screw M6x25Z	1	204-12115-5
51	Hexagon nut M6C	1	207-12138-3
52	Washer D28	2	209-12526-7
53	Sealing ring 26,5x44x3	1	306-17817-1
54	Counternut G3/4	1	207-12143-6
55	Support	1	405-20313-1
56	Set of gaskets consisting of: items 5, 9, 12, 23, 25, 29 and 31		

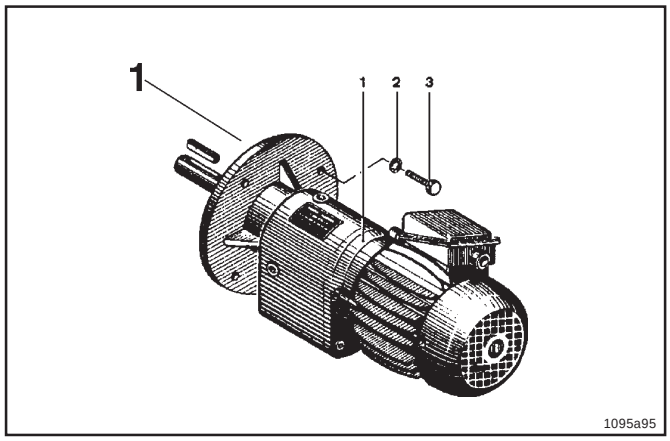

Fig.: 5.2 Drive assemblies for central lubricaton pump

Item	Designation	Qty.	Part Number
	Drive assemblies for central lubrication pump ZPU 08 (1)		
	Assembly for drive with gear motor		
1	Flanged gear motor 0.37 kW, 380-415V 50 Hz, 60 rpm 420-480V 60 Hz, 72 rpm	1	245-13575-1
	or		
	flanged gear motor 0.37 kW, 500 V 50 Hz, 60 rpm	1	245-13564-1
2	Tooth lock washer J8, 4Z	4	210-12161-8
3	Hexagon head screw M8x25C	4	200-12007-5

SKF Lubrication Systems Germany GmbH ● Heinrich Hertz-Str. 2-8 D-69190 Walldorf Tel. +49(0) 6227 33-0 ● Fax: +49 (0) 6227 33-259

Spare Parts Drawing and Spare Parts List

6.2A-18001-A96

Item	Designation	Qty.	Part Number
	Drive assemblies for central lubrication pump ZPU 14		
	Assembly for drive with gear motor (1)		
1	Flanged gear motor 0.55 kW,380-415V 50 Hz, 100 rpm 420-480V 60 Hz, 120 rpm	1	245-13575-2
	or		
	Flanged gear motor 0.55 kW, 500 V 50 Hz,100 rpm	1	245-13564-2
2-13	same as ZPU 08		

Item	Designation	Qty	Part Number
	Drive assemblies for central lubrication pump ZPU 24 (1)		
	Assembly for drive with gear motor		
1	Flanged gear motor 1,15 kW, 380-415V/50 Hz, 180 rpm 420-480V/ 60 Hz, 216 rpm	1	245-13575-3
	or		
	Flanged gear motor 1,15 kW 500 V, 50 Hz	1	245-13564-3

SKF Lubrication Systems Germany GmbH ● Heinrich Hertz-Str. 2-8 D-69190 Walldorf Tel. +49(0) 6227 33-0 ● Fax: +49 (0) 6227 33-259

6 Appendix

6.1 Circuit Diagram

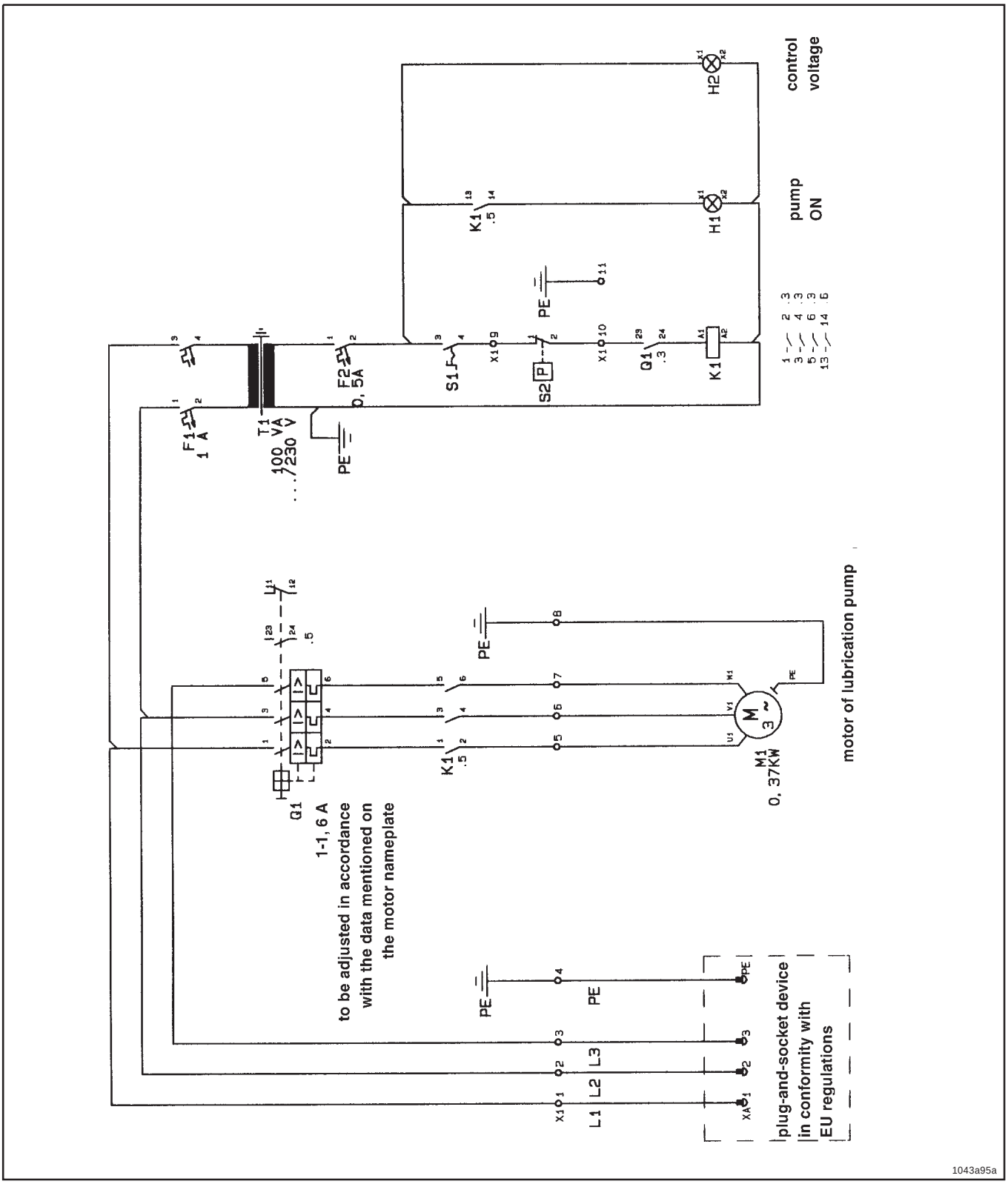

Fig. 6.1: Circuit Diagram

SKF Lubrication Systems Germany GmbH ● Heinrich Hertz-Str. 2-8 D-69190 Walldorf Tel. +49(0) 6227 33-0 ● Fax: +49 (0) 6227 33-259

Parts list

Item	Description	Part number
	housing 220 x 300 x 120	237-13377-1
Q1	circuit-breaker 1 - 1.6 A acc. to motor	236-13820-3...7
F1	automatic circuit-breaker, 2-pole 1 A	236-13840-2
F2	automatic circuit breaker, 1-pole 0.5 A	236-13839-1
S1	control switch	236-13379-6
	switching element 1 S	
K1	motor contactor	236-13804-1
H1	signal lamp, green (pump ON)	236-13876-1
H2	signal lamp, white (control voltage)	236-13876-7
	lamp socket	236-13876-7
T1	control transformer acc. to supply	236-13205-1...9

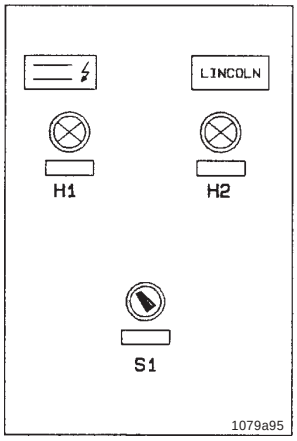

Fig. 6.1.2 Door-view

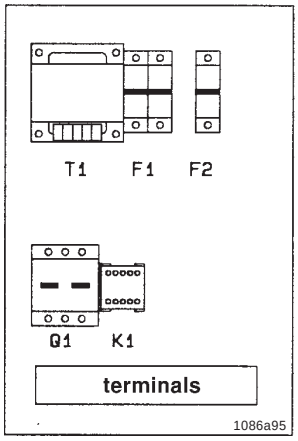

Fig. 6.1.3 Mountig-plate

SKF Lubrication Systems Germany GmbH ● Heinrich Hertz-Str. 2-8 D-69190 Walldorf Tel. +49(0) 6227 33-0 ● Fax: +49 (0) 6227 33-259

6.2 Motor Data Sheet

Standard Multi-Range Three-Phase AC Asynchronus Gear Motors

Pump model		**ZPU08 AM08**		**ZPU 14 AM14**		**ZPU 24 AM24**		**Units**
Motor manufacturer		ABM		ABM		ABM		
Motor type		G80F/D71B-4		G80F/D80B-4		G90F/D90SA-4		
Part-No.		245-13575-1		245-13575-2		245-13575-3		
Frequency	f	50	60	50	60	50	60	[Hz]
Nominal power	P	0.37	0.37	0.55	0.55	1.1	1.1	[kW]
Nominal speed	n1/n2	1370/60	1690/73	1400/100	1700/118	1370/180	1700/216	[min^{-1}]
Rated torque	M	59	48	53	45	58	49	[Nm]
Nominal current	I_N	1.80	----------	2.6	----------	4.7	----------	[A] at 220-240 V
		1.05	----------	1.5	----------	2.7	----------	[A] at 380-415 V
		----------	1.55	----------	2.25	----------	4.2	[A] at 243-277 V
		----------	0.90	----------	1.3	----------	2.4	[A] at 420-480 V
Starting current/ ratio	I_A/I_N	3.9	4.7	4.0	4.9	4.1	4.6	[A]
Power factor	cos φ	0.73	0.73	0.80	0.80	0.85	0.82	
Efficiency	η	0.72	0.74	0.69	0.70	0.73	0.76	[%]
Frame size		71		80		90S		
Type of construction		B5 A1/160		B5 A1/160		B5 A1/160		
Type of protection	IP	55		55		55		
Insulation class		F		F		F		
Weight		ca. 11		ca. 12		ca. 17		[kg]
Flange		∅160		∅160		∅160		[mm]
Shaft end		∅20X50		∅20X50		∅20X50		[mm]

The motors can be connected to the following networks:
220/380 V ± 5%, 50Hz
230/400 V ± 5% and ± 10%, 50Hz
240/415 V ± 5%, 50Hz
265/460 V ± 5%, 60Hz
254/440 V ± 5%, 60Hz
Other voltages available on request.

SKF Lubrication Systems Germany GmbH ● Heinrich Hertz-Str. 2-8 D-69190 Walldorf Tel. +49(0) 6227 33-0 ● Fax: +49 (0) 6227 33-259

Motor Data Sheet

Three-Phase AC Asynchronus Gear Motors 290/500 V (50Hz)

Pump model		**ZPU 08 AM08**	**ZPU 14 AM14**	**ZPU 24 AM24**	**Units**
Motor manufacturer		ABM	ABM	ABM	
Motor type		G80F/D71B-4	G80F/D80B-4	G90F/D90SA-4	
Part No.		245-13564-1	245-13564-2	245-13564-3	
Frequency	f	50	50	50	[Hz]
Nominal power	P	0.37	0.55	1.1	[kW]
Nominal speed	n1/n2	1370/60	1400/100	1370/180	[min $^{-1}$]
Rated torque	M	59	53	58	[Nm]
Nominal current	I_N	1.45	2.0	3.65	[A] at 290 V
		0.85	1.15	2.1	[A] at 500V
Starting current/ ratio	I_A/I_N	3.9	4.1	4.2	[A]
Power factor	cos φ	0.73	0.80	0.81	
Efficiency	η	0.72	0.69	0.73	[%]
Frame size		71	80	90	S
Type of construction		B5 A1/160	B5 A1/160	B5 A1/160	
Type of protection	IP	55	55	55	
Insulation class		F	F	F	
Weight		ca. 11	ca. 12	ca. 17	[kg]
Flange		∅160	∅160	∅160	[mm]
Shaft end		∅20X50	∅20X50	∅20X50	[mm]

The motors can be connected to the following network:
290/500 V ± 10%, 50Hz

SKF Lubrication Systems Germany GmbH ● Heinrich Hertz-Str. 2-8 D-69190 Walldorf Tel. +49(0) 6227 33-0 ● Fax: +49 (0) 6227 33-259

6.3 Pressure Switch

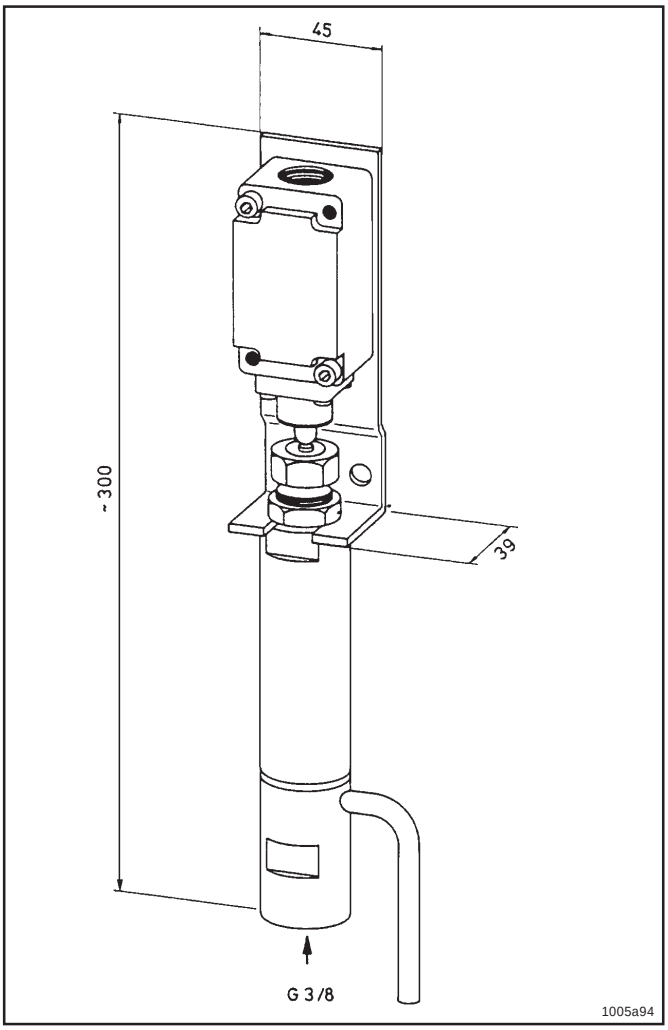

Adjustment of pressure switch:

Before adjusting the pressure switch, switch off current supply to lubrication pump.

After loosening counter nut SW 27, re-adjust the spring tension.

On turning set screw SW 24 clockwise, the compression spring is tensed and the switching pressure is increased. Inverse procedure will result in a pressure decrease.

Scope of delivery:
As illustrated, please indicate the piston diameter when ordering

To be supplied by customer:
Wiring of limit switch to switch cabinet by means of oil-resisting cable 3 x 1.5 mm²

Pessure range	Pressure reducer Piston and cylinder DIA	Compression spring Wire DIA	Part No.
160 - 400 bar	6 mm	4.0 mm	623-25461-2

Connection thread 3/8" BSP
Limit switch: 1 NC contact, 1 NO contact

SKF Lubrication Systems Germany GmbH ● Heinrich Hertz-Str. 2-8 D-69190 Walldorf Tel. +49(0) 6227 33-0 ● Fax: +49 (0) 6227 33-259

6.4 Control valve

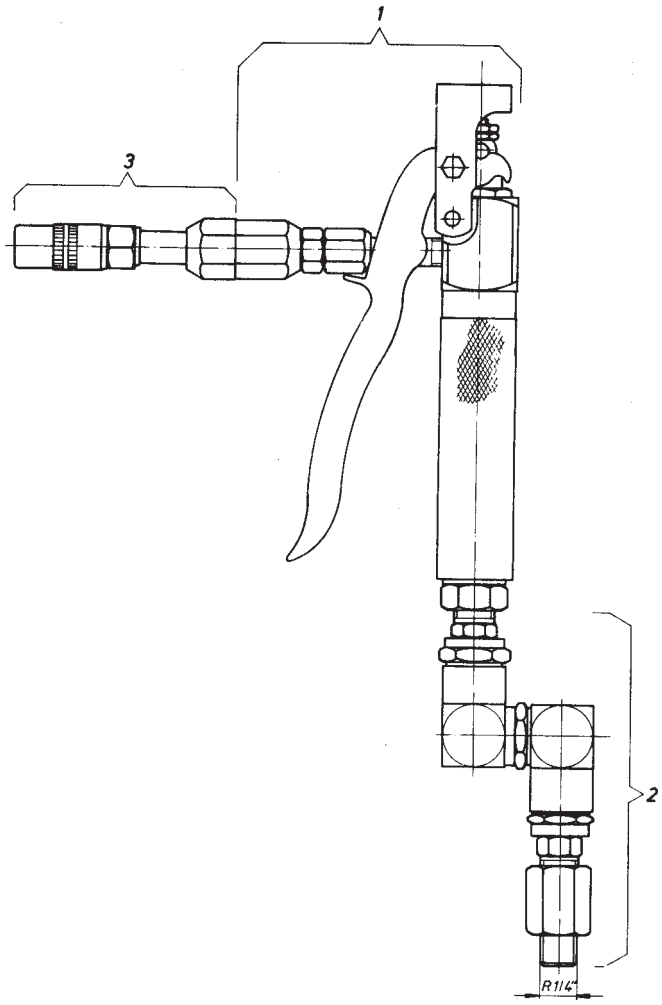

1078a95

Fig. 6.4.1: Control valve

Item	Designation	Part No.
1	control valve	626-27172-1
2	universal swivel with hose connection	626-27204-1
3	connecting tube with hydraulic coupler	526-34044-5

SKF Lubrication Systems Germany GmbH ● Heinrich Hertz-Str. 2-8 D-69190 Walldorf Tel. +49(0) 6227 33-0 ● Fax: +49 (0) 6227 33-259

EC Declaration of Conformity

(in the sense of the Machinery Directive 2006/42/EC, Annex II Part 1 A)

The manufacturer
SKF Lubrication Systems Germany GmbH, Heinrich-Hertz-Str. 2-8, D - 69190 Walldorf

hereby declares that the machine

Designation:	Pump for pumping lubricants
Type:	**AM08/14/24**
Item number:	605-xxxxx-x
Year of construction:	See type plate

satisfies all relevant provisions of the following Directives when launched

2014/42/EG	Machinery Directive
2011/65/EU	RoHS II
2014/30/EU	Electromagnetic Compatibility | Industry

Harmonised / other standards:

DIN EN ISO 12100	2011	DIN EN 60947-5-1	2010	DIN EN 61000-6-2	2006	DIN EN 61000-6-4	2011
DIN EN 809	2012	DIN EN 61131-2	2008	Amendment	2011	DIN EN 60947-5-1	2010
DIN EN 60204-1	2007	Amendment	2009	DIN EN 61000-6-3	2011		
Amendment	2010	DIN EN 60034-1	2011	Amendment	2012		
DIN EN 50581	2013	DIN EN 61000-6-1	2007				

If the above-mentioned machine is modified without prior authorisation by the manufacturer, this EC Declaration of Conformity will be invalidated. The head of standardisation is the authorised agent for the technical documentation.

i.V.

Walldorf
2016-02-15

Jürgen Kreutzkämper
Manager R&D Germany
SKF Lubrication Business Unit

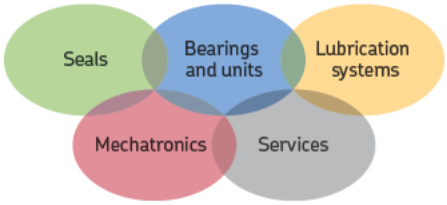

The Power of Knowledge Engineering

Drawing on five areas of competence and application-specific expertise amassed over more than 100 years, SKF brings innovative solutions to OEMs and production facilities in every major industry worldwide. These five competence areas include bearings and units, seals, lubrication systems, mechatronics (combining mechanics and electronics into intelligent systems), and a wide range of services, from 3-D computer modelling to advanced condition monitoring and reliability and asset management systems. A global presence provides SKF customers uniform quality standards and worldwide product availability.

Important information on product usage

All products from SKF may be used only for their intended purpose as described in this brochure and in any instructions. If operating instructions are supplied with the products, they must be read and followed.

Not all lubricants are suitable for use in centralized lubrication systems. SKF does offer an inspection service to test customer supplied lubricant to determine if it can be used in a centralized system. SKF lubrication systems or their components are not approved for use with gases, liquefied gases, pressurized gases in solution and fluids with a vapor pressure exceeding normal atmospheric pressure (1 013 mbar) by more than 0,5 bar at their maximum permissible temperature.

Hazardous materials of any kind, especially the materials classified as hazardous by European Community Directive EC 67/548/EEC, Article 2, Par. 2, may only be used to fill SKF centralized lubrication systems and components and delivered and/or distributed with the same after consulting with and receiving written approval from SKF.

Status of information:
07/2014

Manufacturer:
SKF Lubrication Systems Germany GmbH
Werk Walldorf
Heinrich Hertz-Str. 2-8
D-69190 Walldorf
Tel. +49(0) 6227 33-0
Fax: +49 (0) 6227 33-259
E-Mail: Lubrication-germany@skf.com