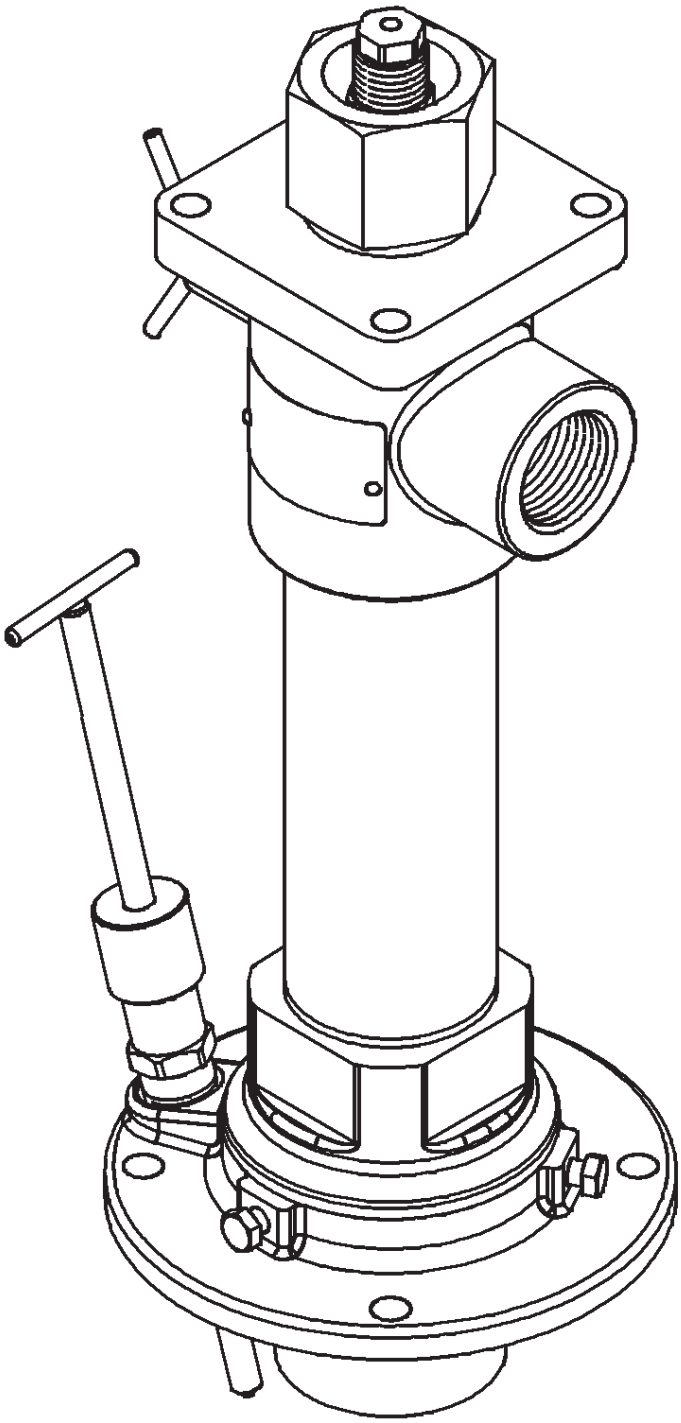

TABLE OF CONTENTS

SAFETY

Read and carefully observe these operating instruction before operating the pump. The pump must be operated, maintained and repaired exclusively by persons familiar with the operating instructions. Operate the pump only after Safety instructions and this Operation Manial are fully understood.

PRODUCT SPECIFICATIONS

Pump Stroke:	6 in. (152 mm)
Output per cycle:	18 cu. in. (295 cc)
Operating Temperature:	-30°F to +160° F (-34° C to +71°C)
Max. Recommended Speed:	75 Cycles/Minute
Output at 75 cpm:	5.8 gpm (22 liter/min).
Wetted part materials:	Carbon steel, Bronze, Polyurethane, Nitrile
Weight:	55 lbs. (25 kg.)

MODEL CHART

Pump Model	Airmotor*	Ratio	Maximum Delivery Pressure	Maximum Air Pressure
2345	86810	45:1	4500 psi (310 bar)	100 PSI (7 bar)
2324	84808	30:1	3000 psi (207 bar)	
2351	84806	18:1	1800 psi (124 bar)	
2366	84804	6:1	1600 psi (110 bar)	200 psi (14 bar)
2373	84803	4:1	800 psi (55 bar)	

* Refer to Airmotor Owner/Operator Manual Section A50, Page 78.

GLAND PACKING DESIGN

Many industrial type materials (sealants, adhesives, inks, etc.) display a tendency to dry out and to build up on the pump plunger rod. These hard dried out materials cause the gland packing to wear rapidly, resulting in leakage and ultimate pump failure The second problem is the gland seal exposure to high pressure and in particular, to pressure fluctuation during pump operation (stroke change over).

The gland packing design* of Pile Driver III pumps addresses both problems:

Externally, a special spring type Metal wiper scrapes built-up and dried material from the pump plunger before it is pulled through the gland packing on the down stroke. In order to help the metal wiper work longer and more efficiently, the lube well of the pump should be filled with a fluid compatible with the material being pumped.

Do not fill the lube well to full capacity, as the reciprocating movement of the pump may draw fluid into the airmotor.

Internally, a special Protection Sleeve (Item 9) with concentric grooves creates a labyrinth path which reduces the effects of internal pressure and stroke change over fluctuation on the gland seal. In addition, a second internal wiper limits gland seal exposure to the pumped material.

The combination of the metal wipers and the protection sleeve results in longer gland seal life and prevents leakage.

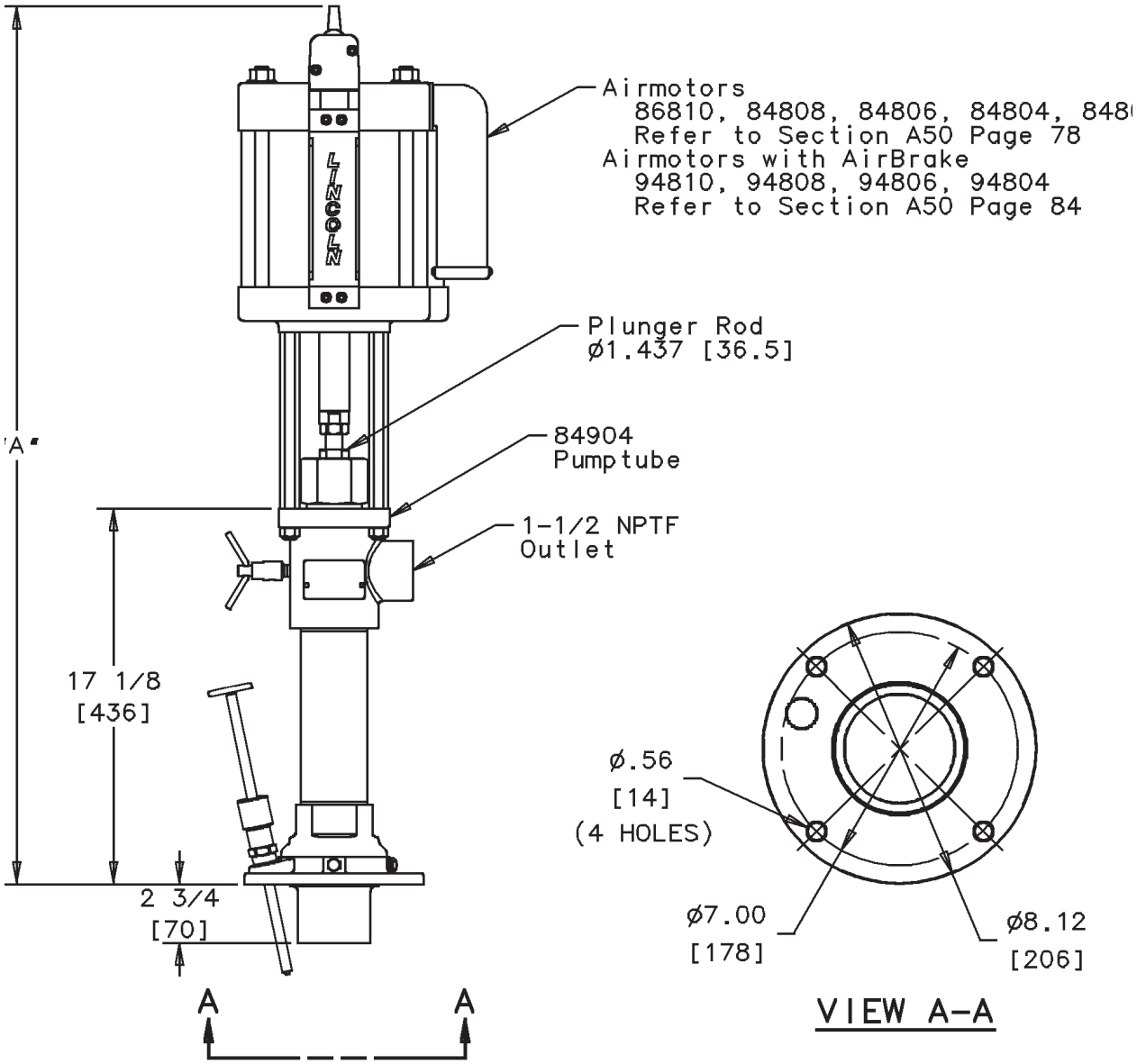

Pump Tube	Airmotor	Airmotor w/ AirBrake	Dimension "A" in.	[mm.]
84904	86810	94810	39-7/8	[1013]
	84808	94808		
	84806	94806		
	84804	94804	40-3/4	[1035]
	84803			

⚠ WARNING

FAILURE TO HEED THE FOLLOWING WARNINGS INCLUDING MISUSE, OVER PRESSURIZING, MODIFYING PARTS, USING INCOMPATIBLE CHEMICALS AND FLUIDS, OR USING WORN OR DAMAGED PARTS, MAY RESULT IN EQUIPMENT DAMAGE AND/OR SERIOUS PERSONAL INJURY, FIRE, EXPLOSION OR PROPERTY DAMAGE.

- Do not exceed the stated maximum working pressure of the pump or of the lowest rated component in your system.
- Do not alter or modify any part of this equipment.
- Do not operate this equipment with combustible gas or fuel, gasoline, diesel fuel, kerosene, etc.
- Do not attempt to repair or disassemble the quipment while the system is pressurized.
- Make sure all fluid connections are securely tightened before using this equipment.
- Always read and follow the fluid manufacturer's recommendations regarding fluid compatibility, and the use of protective clothing and equipment.
- Check all equipment regularly and repair or replace worn or damaged parts immediately.
- Always check equipment for proper operation before each use, making sure safety devices are in place and operating properly.

NOTE: Pump should be installed upright for operation. Use Model 83727 Stand Pipe for bulk material dispensing. Locate pump as close to tank as possible and use a minimum of 3 in (76 mm) I.D. inlet hose or pipe.

ATTACHING AIRMOTOR TO PUMPTUBE

1. Tightly attach tie rods to the airmotor (use short threaded end of the tie rods).
2. Mount airmotor on top of the pumptube outlet and tightly connect Coupling Nut (Item 2) to airmotor piston rod.
3. Hand tighten tie rods to the outlet with four nuts supplied with airmotor.
4. Slowly cycle the pump several times, using just enough air pressure to operate the pump without stalling.
5. Stop the pump on an "up" stroke and tighten the four nuts to securely fasten the airmotor to the pumptube.

⚠ WARNING

Keep hands away from pump inlet while airline is connected. Do not operate pump unless it is firmly mounted on to Pressure Primer or Standpipe and area around pump inlet is clear of obstructions.

OPERATING PRECAUTIONS

* Use Lincoln replacement parts to assure compatible pressure rating.
* **HEED ALL WARNINGS.** Be sure material hoses and other components are able to withstand fluid pressures developed by this pump.
* Do not operate pump continuously at speeds in excess of 75 cycles per minute.
* SERVICING. Before servicing or cleaning pump, or removing fluid hose or gun from a unit that has been used, be sure to disconnect air lines and carefully bleed pressure off the system.
* Check continuity (a good static wire connection) with an ohmmeter. Place one probe on one hose fitting and the other probe on other hose fitting, continuity or proper grounding through hose is good when a reading is obtained on the ohmmeter.
* PREVENT FIRES. When pumping flushing or recirculating volatile solvents, the area must be adequately ventilated.
* Keep solvents away from heat, sparks and open flames. Keep containers closed when not in use.

⚠ WARNING

PREVENT STATIC SPARKING. If static sparking occurs, fire or explosion could result. Pump dispensing valve and containers must be grounded when handling inflammable fluids such as petroleum products, paints, lacquers, etc, and wherever discharge of static electricity is a hazard.

PUMP PRIMING

To start operating, the pump has to be primed with pumped materials. The Pile Driver III pump is a double acting (pumps material on up" & down" stroke) positive displacement reciprocating pump and as such intakes material only on the "up" stroke.

To prime the pump, open output line (material valve) and slowly open air supply valve until pump starts. Allow pump to cycle very slowly until all air is pushed out of lines and material fills out pump and lines. Close output line (material valve) - pump should stall against pressure.

If pump fails to prime properly, open Bleeder Valve (Item 11) slightly to expel trapped air and at the sign of material coming out of the valve, close it tightly.

NOTE: Pumps are factory tested with light oil and some of it is left in to protect pump parts during storage and transportation. To prevent contamination of material to be pumped, flush pump before using.

⚠ CAUTION

DO NOT allow pump to operate when out of material.

OUTLET POSITION ADJUSTMENT

The position of the pump outlet may be adjusted by loosening the three screws (Item 26) and rotating the pump-tube outlet into the position desired. Retighten the screws to 25 ft/lbs.

©When repairing pump, reassemble in vertical position to achieve optimum life of seals and packings.

DISASSEMBLY PROCEDURE

Tools Required	(Used on Item #)
9/16” wrench	(Item 26)
3/4 wrench	(Item 11)
7/8” wrench	(Item 1)
1-1/8” wrench	(Items 2, 15, 20 & 27)
1-5/8” wrench	(Item 16)
2-5/8” wrench	(Item 3)
3-1/2” wrench	(Item 23)
3” dia. strap wrench	(Item 14)

Two screwdrivers (Items 6 & 10)

Procedure

1. Remove Screws (Item 26) from Mounting Flange (Item 25).

2. Remove Mounting Flange (Item 25) from Inlet Bushing (Item 23).
   a. Remove Priming Plug (Item 28) from Connector (Item 23).
   b. Remove Connector (Item 27) from Mounting Flange (Item 25).

3. Remove Inlet Bushing (Item 23) from pump Tube (Item 14).
   a. Remove 0-ring (Item 24) from Inlet Bushing (Item 23).
   b. Remove Check Seat (Item 22) from Inlet Bushing (Item 23).
   c. Remove 0-ring (Item 13) from Check Seat (Item 22).

4. Remove Check (Item 21) from Pump Tube (Item 14).

5. Remove Bolt Connector (Item 1) from Plunger (Item 15).

6. Remove piston and plunger assembly from bottom of Pump Tube (Item 14).
   a. Remove piston assembly from Plunger (Item 15).
   b. Remove Piston Nut (Item 16) and Check Ball (Item 19) from Piston Body (Item 20).
   c. Remove U-cup (Item 17) from Piston Nut (Item 16).
   d. Remove Piston Collar (Item 18) and U-cup (Item 17) from Piston Body (Item 20).

7. Remove Pump Tube (Item 14) from Outlet Body (Item 12).
   a. Remove 0-rings (Item 13) from Pump Tube (Item 14).

8. Remove Bleeder Valve (Item 11) from Outlet Body (Item 12).

9. Remove Gland Nut (Item 3) from Outlet Body (Item 12).
   a. Remove Wiper (Item 5) and Spacer (Item 4) from Gland Nut (Item 3).

10. Remove Bushing (Item 6) from Outlet Body (Item 12).
    a. Remove 0-ring (Item 7) and U-cup (Item 8) from Bushing (Item 6).

11. Remove Sleeve (Item 9), Wiper (Item 5) and Retaining Ring (Item 10).

12. To reassemble pump, reverse disassembly procedure. (Refer to illustration for torque specifications.)

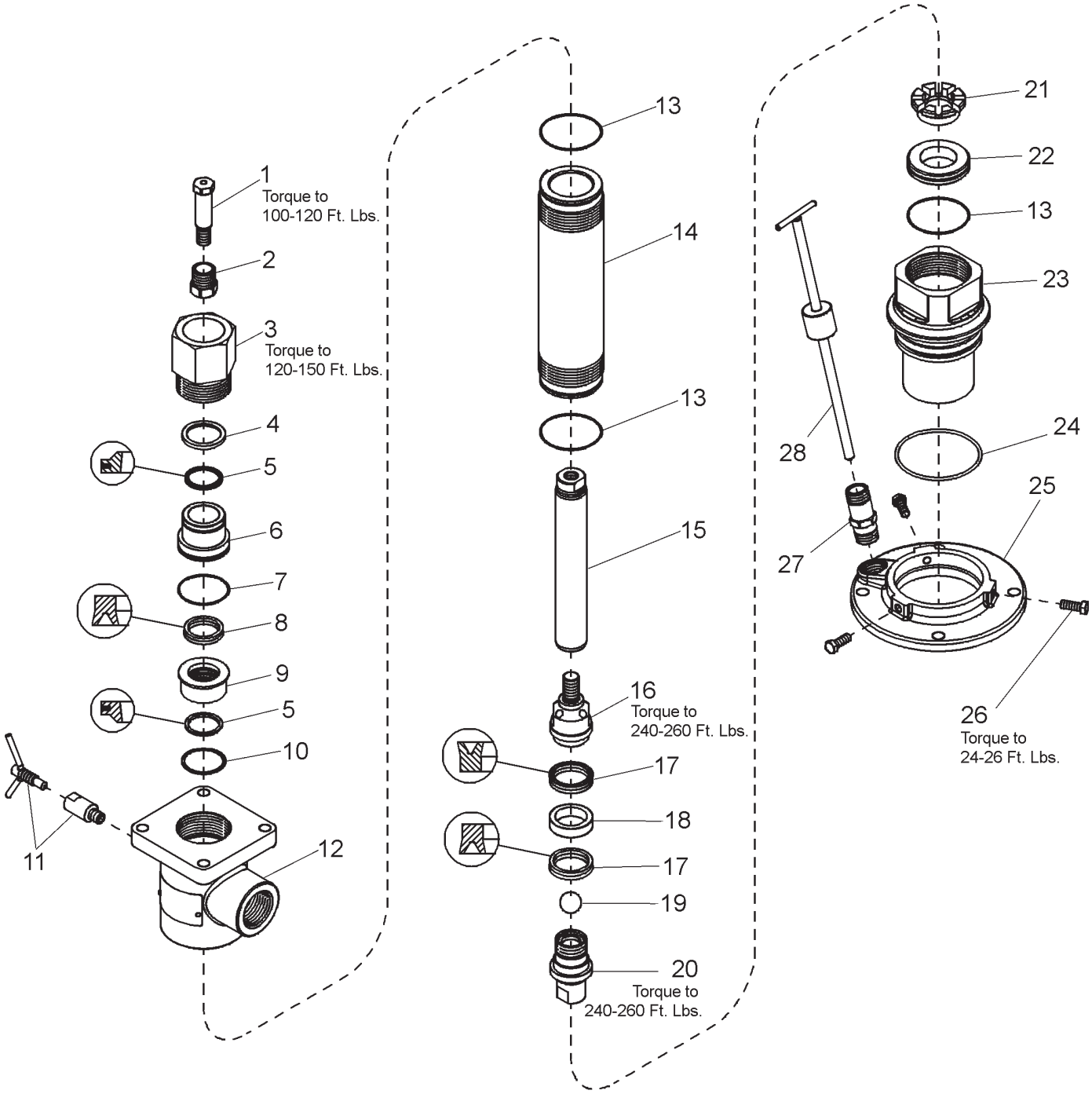

Note: Install wipers (Item 5) and U-Cups (Items 8 & 17) in direction shown in enlarged views.

PARTS LIST

Item No.	Description	Qty.	Part Number
1	Bolt Connector (7/8” hex)	1	236225
2	Coupling Nut (1-1/4” hex)	1	237051
3	Gland Nut (2-5/8” hex)	1	237659
4	Spacer	1	237653
5	Wiper	2	237654
6	Bushing	1	237127
7	O-ring (polyurethane) # *	1	236238
8	U-cup (polyurethane) # *	1	237125
9	Sleeve (Stamped “M”)	1	247253
10	Retaining Ring	1	247252
11	Bleeder Valve (3/4” flats)	1	84012
12	Outlet Body	1	236266
13	O-ring (polyurethane) *	3	236237
14	Pump Tube	1	236257
15	Plunger Rod (1-1/8” flats)	1	237123
16	Piston Nut (1-5/8” flats)	1	246906
17	U-cup (polyurethane) *	2	236236
18	Piston Collar	1	246908
19	Check Ball	1	68649
20	Piston Body (1-1/8” flats)	1	246907
21	Check	1	237121
22	Check Seat	1	236228
23	Inlet Bushing (3-1/2” flats)	1	246917
24	O-ring (nitrile) *	1	246837
25	Mounting Flange	1	246920
26	Hex Cap Screw (9/16” hex)	3	272821
27	Connector (1-1/8” hex)	1	13252
28	Priming Plug	1	93075

* Included in Seal Kit No. 84909

Included in Gland Seal Kit No. 85314

PUMPTUBE SERVICE KITS

	Polyurethane	Teflon	Polyethylene
Seal Kit	84909	84916	84917
Gland Seal Kit	85314	85324	85330

Polyurethane Seal Kit contains all soft seals.

Teflon and Polyethylene Seal Kits contain gland and piston u-cups only.

Gland Seal Kits contain gland u-cup and o-ring only.

TROUBLESHOOTING

Problem	Possible Cause	Solution
Pump does not operate.	Restricted or inadequate air supply.	Check air supply pressure and air hose diameter (see Airmotor manual for minimum air supply hose diameter).
	Obstructed material output.	Check output line for restrictions.
Erratic or accelerated operation.	Pump is not primed.	Prime pump (see "Pump Priming" instructions).
	Insufficient material supply.	Refill material supply.
	Material is too heavy for priming.	Decrease output with material valve. Increase pressure to pressure primer (if in use). Check for inlet restrictions.
Pump operates on "down" stroke only (missing "up" stroke).	Worn or damaged piston u-cup (Item 17) or piston check (Items 19 and 20).	Check and replace if needed.
Pump operates on "up" stroke only (missing "down" stroke).	Worn or damaged inlet check (Items 21 and 22).	Check and replace if needed.
	Insufficient material supply. Pump is not intaking enough material to dispense on both strokes.	Check inlet for restrictions. Decrease output with material valve.
Pump is operating but not dispensing material.	Inlet check (Items 21 and 22) is not seating or is damaged.	Check and replace if needed.

Americas:
One Lincoln Way
St. Louis, MO 63120-1578
USA
Phone +1.314.679.4200
Fax +1.800.424.5359

Europe/Africa:
Heinrich-Hertz-Str 2-8
D-69183 Walldorf
Germany
Phone +49.6227.33.0
Fax +49.6227.33.259

Asia/Pacific:
25 Int'l Business Park
#01-65 German Centre
Singapore 609916
Phone +65.562.7960
Fax +65.562.9967

Web site:
www.lincolnindustrial.com