This drawing is the property of Lincoln Industrial Corporation (Lincoln). It contains proprietary information developed at Lincoln's expense. Acceptance of this drawing constitutes agreement by the recipient that its contents will not be disclosed, copied, duplicated, disseminated or otherwise used except for purposes established by contract or otherwise authorized in writing by Lincoln.

SUPERSEDES

SUPERSEDED BY

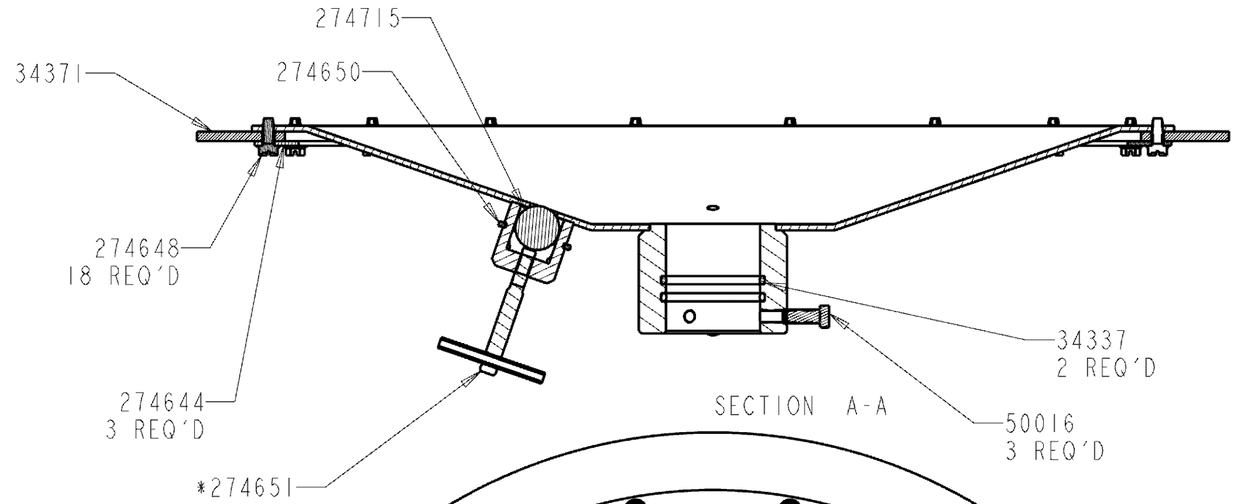

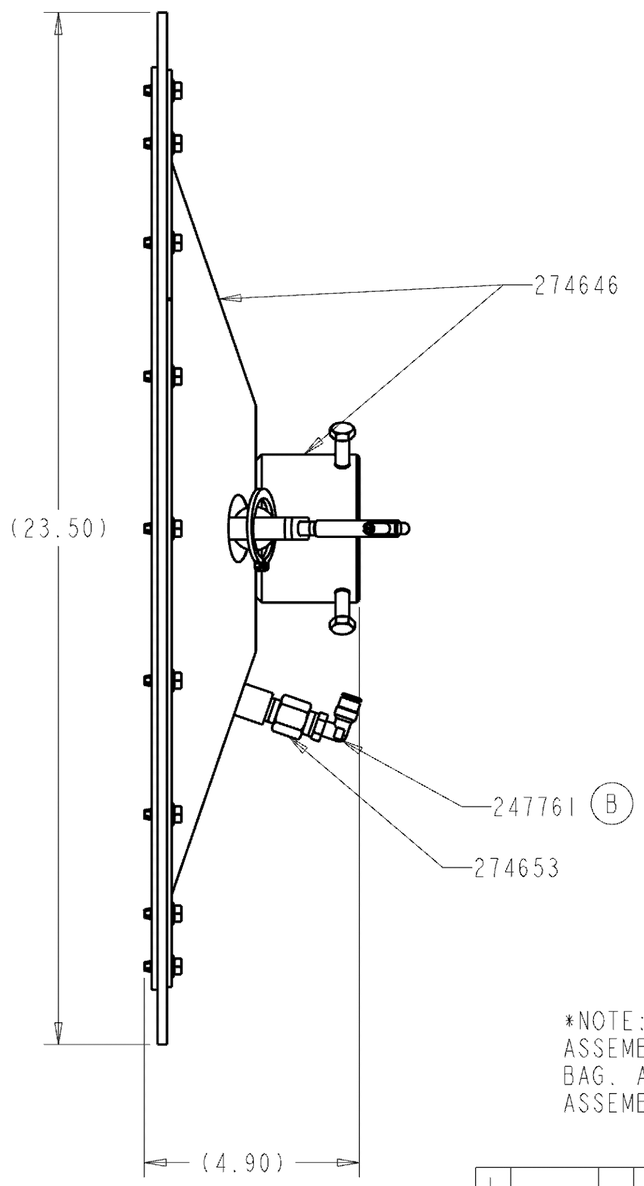

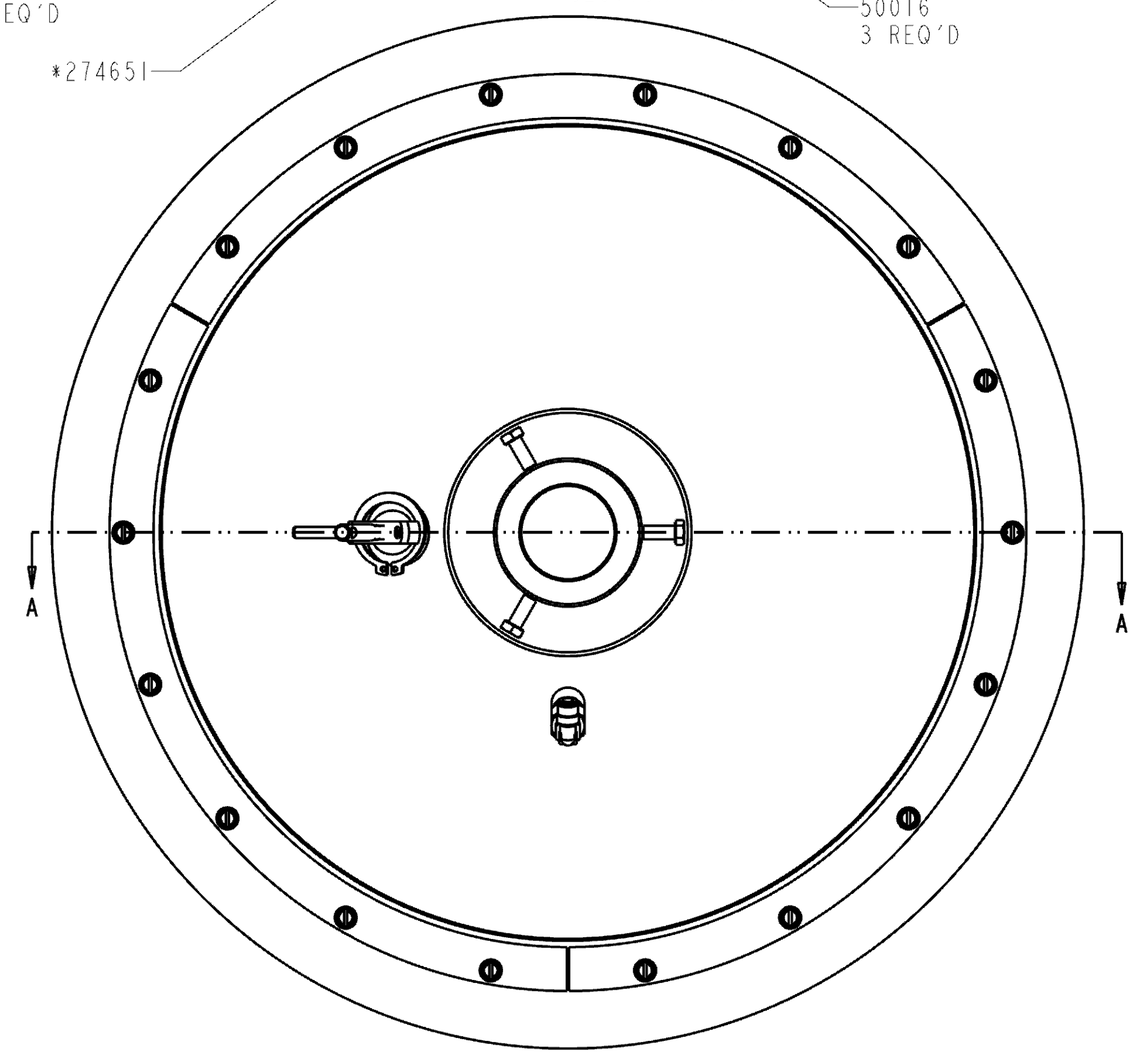

*NOTE: PLACE 274651 HANDLE ASSEMBLY INTO 411748 CLOTH BAG. ATTACH BAG TO FOLLOWER ASSEMBLY.

S. Preßler 08.23.2013

3. THIS DRAWING COMPLIES WITH ANSI STANDARDS.
2. DIMENSIONS ARE BEFORE COATING.
1. DIMENSIONS ARE IN INCHES.
NOTES, UNLESS OTHERWISE SPECIFIED:

REV	DATE	INIT	DESCRIPTION	REV	DATE	INIT	DESCRIPTION
L				F			
K				E			
J				D			
I				C	7/17/06	PAK	ADD NOTE FOR 274651 50271
H				B	03/07/06	CDH	247761 was 274671 #50047
G				A	01/31/06	CDH	WAS A52355R-115, REL TO PROD 49978

MATERIAL

HEAT TREAT

FINISH

LETTER NO. 50271

STATUS WIP

DR BY: CD HOLLAND
DATE: 10/24/2005
CHK BY: AG

CONTROL GROUP A

LINCOLN

TITLE
400# FOLLOWER ASSY

FORMAT C

PART NUMBER 274655

REV C

PRO-E DRAWING